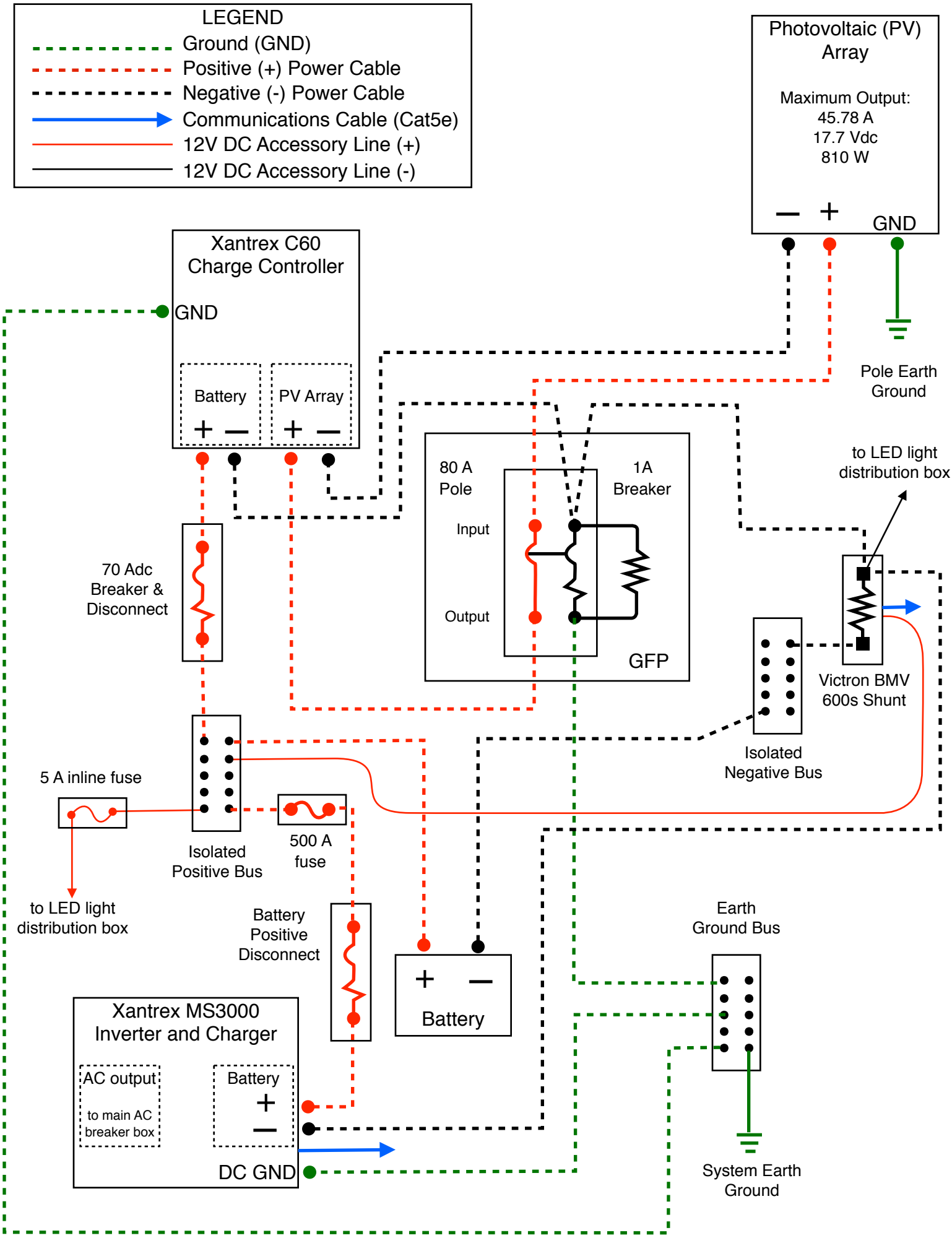
LEGEND
Ground (GND)
Positive (+) Power Cable
Negative (-) Power Cable
Communications Cable (Cat5e)
12V DC Accessory Line (+)
12V DC Accessory Line (-)
Photovoltaic (PV) Array
Maximum Output:
45.78 A
17.7 Vdc
810 W
GND
Pole Earth Ground
Xantrex C60 Charge Controller
GND
Battery
PV Array
80 A Pole
1A Breaker
Input
Output
GFP
to LED light distribution box
70 Adc Breaker & Disconnect
Victron BMV 600s Shunt
Isolated Negative Bus
5 A inline fuse
Isolated Positive Bus
500 A fuse
to LED light distribution box
Battery Positive Disconnect
Battery
Earth Ground Bus
Xantrex MS3000 Inverter and Charger
AC output
to main AC breaker box
Battery
DC GND
System Earth Ground